振宇
ZHEN YU ®

FQD300 series

High performance frequency conversion governor

Instruction Manual

Jinan Ming Sai Electrical Co.,Ltd.

(Remark)

1) Maximum applicable motor refers to the Maximum power light load motor which the inverter can drive, and 4-pole motor is standard. **There's no way to change it.**

2) Rated output current refers to the output current when the output voltage is 380V (or 220V).

3) Overload capacity is represented by over-current to the inverter rated current ratio of the percentage (%), when used repeatedly must wait temperature below when inverter and motor down to 100%.

4) The max output voltage can not exceed the supply voltage, under the power supply voltage can be arbitrarily set the output voltage (The peak value of the inverter output voltage is DC voltage).

5) Power capacity change according to the value of impedance(including the input reactor and wire)aside the power.

1.4. Braking unit and braking resistor

Inverter		Braking unit			Braking resistor		
Voltage	Power KW	Configuration	Specification	Amount	Configuration	Specification	Amount
Single-phase 220V	0.75	preset		1	outlay	80W /150Ω	1
	1.5	preset		1	outlay	200W/100Ω	1
	2.2	preset		1	outlay	200W/70Ω	1
	3.0	preset		1	outlay	500W/90Ω	1
	3.7	preset		1	outlay	600W/100Ω	1
Three-phase 380V	0.75	preset		1	outlay	150W /400Ω	1
	2.2	preset		1	outlay	250W/200Ω	1
	3.0	preset		1	outlay	260W/200Ω	1
	3.7	preset		1	outlay	400W/150Ω	1
	5.5	preset		1	outlay	500W/90Ω	1
	7.5	preset		1	outlay	800W/60Ω	1
	11	inlay		1	outlay	1000W/47Ω	1
	15	inlay		1	outlay	1500W/36Ω	1
	18.5	inlay		1	outlay	2500W/47Ω	1

2.3.1 Installation wiring should be separated from power cables and control cables, such as using separate trunking, etc. If the control circuit and the power cable line must cross, cross wiring should be 90 degrees.

2.3.2 Use shielded wires or twisted pair connection control circuits, to ensure the unshielded place as short as possible, should be used for cable sleeve if conditions permitted.

2.3.3 Avoid inverter gravity line(Output and input line)and signal lines parallel wiring and cluster wiring, should be disperse and cross wiring.

2.3.4 Inverter and control signal cables should be used shielded twisted pair cable, the skin of shielded cable connect to the COM terminal.

2.3.5 Ground wire of inverter, motor and others should grounded on the same point.

2.3.6 Add data line filters to the signal line.

2.3.7 Connecting line of the detector and the shield of control signal line should be ground with cable clamp metal.

2.4. Wiring instructions

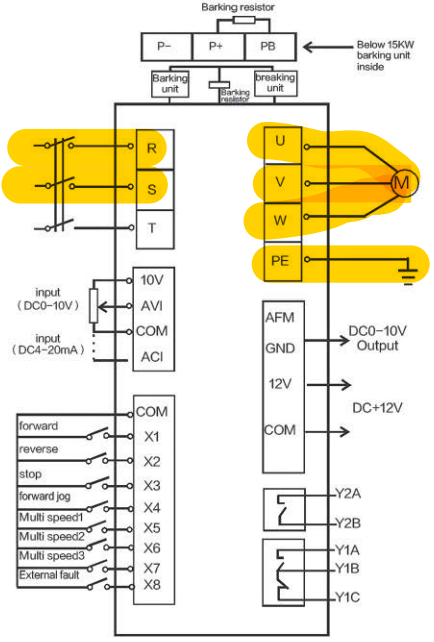

2.4.1 Main circuit terminal explanation

Terminal mark	Terminal name	Explanation
L、N	AC power input	Connect to the frequency power supply Single-phase AC220V 50-60Hz
R、S、T		Three-phase AC230V or 380V50-60 Hz
U、V、W	Inverter output	Connect to three-phase Asynchronous motor
P+、PB	Connect to braking resistor	Between P+、PB, connect to barking resistor (under 15KW)
PE	Grounded	Inverter grounding, must be properly grounded.

2.4.2 The control loop terminals explanation

Terminal mark	Terminal name	Explanation
AVI	Frequency setting voltage input	Input 0-10V, PID given or feedback
ACI	Frequency setting voltage input	Input 4-20mA, PID given or feedback
AFM	0V-10V output	Used to indicate the frequency, current, speed, etc.
10V	Frequency setting auxiliary power	And AVI, COMD connected potentiometer (4.7K-10K)
X1	Multifunction input terminals 1	Function set by parameter P091, the factory defaults is “forward start”
X2	Multifunction input terminals 2	Function set by parameter P092, the factory defaults is “reverse start”
X3	Multifunction input terminals 3	Function set by parameter P093, the factory defaults is “stop”
X4	Multifunction input terminals 4	Function set by parameter P094, the factory defaults is “forward jog”
X5	Multifunction input terminals 5	Function set by parameter P095, the factory defaults is “muti-step speed No.1”
X6	Multifunction input terminals 6	Function set by parameter P096, the factory defaults is “muti-step speed No.2”
X7	Multifunction input terminals 7	Function set by parameter P097, the factory defaults is “muti-step speed No.3”
X8	Multifunction input terminals 8	Function set by parameter P098, the factory defaults is “external fault”
Y2A、Y2B	Relay contact output	Y2A、Y2B is normally open contact
Y1A、Y1B、Y1C	Relay contact output	Y1A、Y1B is normally open contact、Y1B、Y1C is normally closed contact
COM、24V	Auxiliary power	COM 、 +24V ≤ 50mA, COM is analog input, output and

		multi-functional terminals of common land

2.4.3 Main circuit wiring explanation

1) The power supply and screw terminals of electrical wiring, pls use the terminals with insulation tube.

2) Remember that the power must not be connected to the inverter output terminals(U, V, W), otherwise it will damage the inverter.

3) After wiring, cuts must be cleaned, wire offcuts may cause the inverter abnormalities, failure or damage, must always be kept clean. When drilling holes on the console, be careful not to make powder and other debris into the inverter.

4) To make the voltage pressure drop within 2%, please use the appropriate type of cable wiring. when the wiring distance between the inverter and motor is too long, especially in the case of low-frequency output, the main circuit cable voltage drop will cause the motor torque to decrease.

5) Cable distance up to 500 meters, especially long-distance wiring, because inrush current that generated by wiring parasitic capacitance can cause over-current protection ation. the device connected to the output may meet abnormal or failure operation. Therefore, the maximum wiring distance in the following table. (When the inverter is connected to two or more motors, the wiring length should not exceed 500 meters)

Inverter capacity	Under 0.75KW	2.2KW	Over 4.0KW
Non-low noise mode	300M	500M	500M
Low noise mode	300M	500M	500M

6) Between P+, B- terminal, is recommended to connect the braking resistor option.

7) Electromagnetic interference: inverter input and output circuit contains harmonic components, in high demand situations, please install radio noise filter at the input to minimize interference.

8) Do not install electric power capacitance, surge suppressors and radio noise filter at the output of the inverter, it will cause inverter failure or damage to the device.

9) After power on or runing, to change the wiring operation, first you must shut off the power after more than 10 minutes, using a multimeter check the voltage, after power-off in a period of time, the capacitor still has a dangerous high voltage.

10) Ground terminal must be grounded.

▲Since the inverter have leakage current, to prevent electric shock, the inverter and the motor must be properly grounded.

▲Grounding with separate ground terminal (Do not use screws in the shell, chassis, etc. Instead).

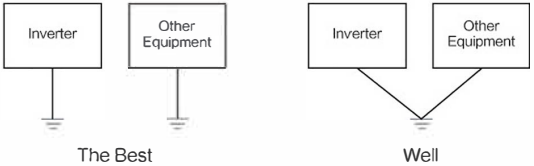

▲Try to use thick grounding cable wire, ground wire close to the inverter as short as possible.

▲Motor at inverter terminal ground, use one of four-core cable grounding in which specifications same as input cables.

2.4.4 Inverter main circuit terminal block:

0.75~1.5KW220V:		L	N	PE	U	V	W	PB	P+	
2.2~3.7KW220V:	L	N		PB	P+	U	V	W	PE	
5.5KW220V:	L	N		PB	P+	P-	U	V	W	PE
0.75~2.2KW380V:	R	S	T	PE	U	V	W	PB	P+	
3.0~5.5KW380V:	R	S	T	PB	P+	U	V	W	PE	
7.5KW380V:	P-	P+	PB	R	S	T	U	V	W	PE
11~15KW380V:	P-	P+	PB	R	S	T	U	V	W	PE
18.5KW380V:	R	S	T	P+	P-	U	V	W	PE	

Remark:

▲Different models may have difference, pls see the subject product.

▲When wiring, the inverter terminals(P +, P-) should marked same as braking unit, wrong connection may damage the inverter.

▲Cabling distance between Braking unit and braking resistor unit should be within 5 meters, even using twisted pair can not be more than 10 meters.

▲If the transistor in braking unit is damaged (shorted), the resistance will be very hot and cause a fire. Therefore, the input of the inverter install a magnetic contactor, cut off the power in case of failure.

1. The cable must be 75°C copper wire。2. Tighten the screws at a certain intensity. No tightening can cause a short circuit or malfunction, tighten overdone will damage screws and terminal, also cause a short circuit or malfunction.

2.4.5 The control loop wiring

1) "COM" terminal is control signal common terminal, do not public grounded.

2) The wiring of control circuit terminals should use shielded or twisted pair, and must be

3.5.2 Start up method

As control method of FC300 series inverter is set operator mode of operation at the factory, on test run, you can use the jog key on keyboard to move, generally test run can be used 5.0Hz.

Setting P087 = 1 should revert to these settings
5 Hz is 1/10 their motor rated frequency (P003 = 50)
P057 = 30 so should get 5 X 30 = 150 RPM

Chapter 4 Function parameter instructions

No.	Function	Function description	Factory settings
P001	Motor rated current	Setting range：0.00-1000.00A Setting range ： 20—110% inverter rated current. Setting based on the actual motor rated current. Drive more than one motor, can not protect the motor, then please install protection relay for all motors.	Depending on type 4.50
P002	Motor rated voltage	Setting range：50-460V。 Setting based on the actual motor rated voltage.	220V (380V) 220
P003	Motor rated frequency	Setting range：20.0—1000.0Hz Setting based on the actual motor rated frequency.	50.0Hz 800.0
P004	Motor load current	Setting range：20%-50% Motor no-load current and the motor rated current ratio will affect the amount of slip compensation.	40
P005	Reserved		
P006	Reserved		
P007	Torque Upgrade	Setting range ：0-30%(Depending on type) This parameter sets minimum starting voltage value of V/F curve. set this parameter appropriately can improve the low starting torque.	Depending on type 0
P008	Reserved		
P009	Reserved		

P010	Reserved		
P011	Reserved		
P012	Starting frequency	Setting range: 1.0Hz—Maximum operating frequency The frequency will accelerate to the target frequency when start inverter. If this value is set too large, it may result in over-current protection action.	1.0 1/50X800 = 16
P013	Starting Delay	Setting range: 0.0—600.0S Press the start frequency output when start inverter, to maintain this set time to the target frequency acceleration. This function is used to improve the motor starting characteristics, to ensure that the motor can be fully activated within a set time.	0.0
P014	Stop mode	Setting range: 0, after deceleration, DC braking; 1, freely stop This function is used to select the motor stop mode. When selecting the	0

		barking, set this parameter, be sure to gradually increase until sufficient braking torque.	
P019	Reserved		
P020	Reserved		
P021	Maximum frequency	Setting range: minimum operating frequency—1000.0Hz Setting the maximum allowable frequency of the motor, all operational frequencies are affected by this frequency limit.	60.0Hz **800.0**
P022	Minimum operating frequency	Setting range : 0.0 Hz—Maximum operating frequency, setting operable minimum frequency.	0.0Hz
P023	Minimum output frequency	Setting range : 0.0 Hz—Maximum operating frequency, Setting minimum output frequency that motor permissible . If the operating frequency setting under this frequency, the inverter stop output. applicable for Water Supply System.	1.0Hz

		an external control signal;	
P028	Reserve		
P029	Reserve		
P030	First frequency	Setting range : Minimum operating frequency—maximum frequency When the speed command (P064) is 0, this frequency as the first speed in operation. This parameter can be directly through the control panel ▲、▼keys to modify, recall automatically when power off.	50.0Hz **800.0**
P031	Second frequency	Setting range : Minimum operating frequency—maximum frequency	2.0Hz
P032	Third frequency	Setting range : Minimum operating frequency—maximum frequency	3.0Hz
P033	Fourth frequency	Setting range : Minimum operating frequency—maximum frequency	4.0Hz
P034	Fifth frequency	Setting range : Minimum operating frequency—maximum frequency	5.0Hz
P035	Sixth frequency	Setting range : Minimum operating frequency—maximum	6.0Hz

		Factory setting, for read only.	
P053	Analog output select	Setting range: 0, output frequency of analog inverter , 0 — maximum frequency corresponds 0 — 10V; 1, output current of analog inverter , 0 — 2times rated current corresponds to 0 — 10V; This function is used to connecting a DC voltmeter or other equipments between AFM and COM terminals. remote monitoring inverter output frequency, output current. AFM terminal maximum output voltage is 10V。 2. Output voltage of analog inverter, 0-2 times the rated motor voltage corresponding to 0-10V.	0 **Use**
P054	the minimum analog corresponds to output	Setting range: 0.00—3.00V terminal signal size when setting minimum analog(0Hz or 0A) .	0.0
P055	the maximum	Setting range: 5.00—20.00V	10.00

	analog corresponds to output	terminal signal size when setting maximum analog(max frequency or 2 times inverter rated current). Notice: This parameter is used to revise the size of the analog output, AFM terminal actual maximum output voltage is 10V。	
P056	start display selection	Setting range: 0, frequency (H, F); 1, motor current (A); 2, bus voltage (U); 3, output voltage (u); 4, Approximate mechanical speed=output frequency*speed frequency ratio (r); 5, PID gived amount(y); 6, PID feedback amount (L); 7, count value(J); 8, Factory testing Reserved (d);	0 **Use**
P057	speed frequency ratio	Setting range: 0.01—100.00 This function is used to set the speed display and operating frequency ratio. so that the speed display matches the actual speed.	30.00 **75.00 Will show 1/2 speed**

P058	carrier frequency	Setting range : 0-5 corresponding to 3K, 5K, 7K, 9K, 11K, 13K The higher carrier frequency, the lower motor noise, the electrical interference greater, the greater heat inverter, the leakage current increases, the efficiency drops。The carrier frequency is lower, contrary to the above.	1 **5 gives 13/0.8 = 16.25 PWM pulses per cycle of 800 Hz**
P059	Desired frequency attained	Setting range: 0.0—1000.0Hz When the inverter output frequency is greater or equal to this setting value, the inverter can be output signal through the multi-function output terminals.	0.0Hz
P060	Reserved		
P061	Hopping frequency starting point	Setting range: 3.0-100.0Hz Used to avoid mechanical resonance point.	20.0
P062	Jump frequency width	Setting range: 0.0-5.0Hz Used to avoid mechanical resonance point.	0.0
P063	Undervoltage protection	Setting range: 220V: 150-250VDC;	170 (320)

	voltage	380V：300-450VDC。	
P064	Frequency Command source setting	Setting range: 0 . Control panel digital setting; 1.AVI terminal 0-10V setting; 2.ACI terminal 4-20mA setting; 3.Control panel digital setting, automatically switch to 4 if detected 0-10V signal from AVI terminal. 4.AVI terminal 0-10V setting, when AVI signal is 0 , automatically switched to 3 if detects panel ▲ 、 ▼ operation. 5.Panel potentiometer	3 0
P065	Run command source setting	Setting range: 0. Operation panel Controls (forward rotation start、Reverse rotation start 、stop); 1. External terminal control (forward/stop 、reversal/stop); 2. External terminal control (start/stop 、reversal/forward);	5 0

		open contact, X2(reversal) and COM connected to reversal button normally open contact. When you select 0-3 automatically adapt (5) , the inverter can operate at 0-3. Note: X1, X2 are connected with COM, the motor reversal start. Special Note: In the case of may lead to personal safety, production loss or damage to the equipment, be sure to correctly set this parameter to prevent accidents.	
P066	Steering Control	Setting range: 0, forward, whether running command is forward or reversal, the motor output is forward. 1, reversal, whether running command is forward or reversal, the motor output is reversal; 2, Can forward and reversal. if running command is forward, the motor output	2 0

		is forward; if running command is reversal, the motor output is reversal. Used to set the run direction of the motor, automatic memory after power failure. Forward and reversal trigger function will change this parameter.	
P067	reversion control	Setting range: 0, Prohibit motor reversal; 1, allow motor reversal; 2, allow motor reversal, and allows keyboard inversion start; Used to limit the reverse, in some situations do not allow motor reversal, the parameter should be set to 0, to prevent accidents.	1 0
P068	Reserved		
P069	Special funtion 1	This parameter is four hexadecimal number D3、D2、D1、D0, represent different functions. D0、D1, reserved D2, Program runs reset mode 0, Automatically reset at the	

		acceleration.	
P071	Fault record 1	0, No fault 1, Serious overcurrent (HoC) 2, Overcurrent (oC) 3, Overvoltage (oU) 4, lowvoltage (LU) 5, overload (oL) 6, Overheat (oH) 7, external fault (EF) 8, memory error (EEP) 9, data error (dEr) 10, CPU fault (CPU) 11, code error (CodE) 12, lack of input phase (LP) 13, lack of output phase (oP) 14, reserve	0 (Read only) Remark:fault record can not be modified,so may leave test records before factory.
P072	Fault history 2	(same as above)	0
P073	Fault history 3	(same as above)	0
P074	Accumulative boot time	(day)	(Read only)
P075	reserved		
P076	reserved		
P077	Torque motor voltage limit	This parameter is the relative proportion of the value of motor rated voltage,setting	10

		range:10%-100%. Function:Limiting the minimum voltage which output to the torque motor. Example:P077=50, P002=380V, so P380*50%=190V, mean motor voltage can adjust between 190-380V.	
P078	Middle voltage	1/3 Motor rated frequency corresponding output voltage. 0-50%, 0 representatives of this power is invalid.	0 ?
P079	reserved		
P080	reserved		
P081	reserved		
P082	reserved		
P083	reserved		
P084	reserved		
P085	reserved		0
P086	User password	Setting range: 0-65535。0: Invalid; 65535: Invalid; When a password is not set, the P086 is set to a new password, and then the P087 is set to 2, the password becomes effective.	0

		When a password is set, you must enter the correct password in P086 before changing parameters, if P087 is set to 3, the password is cleared.	
P087	Special operation	Set this parameter, can perform some special operation sequence, the operation is completed automatically returns to 0, no memory. Setting range: 0, no operation; 1, restore factory settings; 2, remember user password; 3, clear user password; 4, upload parameters; 5, downdload parameters ; (notice: download from the same version of the software; the user required to consider the compatibility if copies between the different power specifications) others: reserve, Can not set arbitrarily;	0
P088	Braking	Setting range:	360V

	corresponding to Maximum frequency (PID maximum target value)	For setting corresponding relationship between analog quantity and target frequency (PID target value). For example, when AVI terminal input 10V*98%=9.8V, frequency value reaches the maximum frequency (P021).	
P109	Analog input corresponding to Minimum frequency (PID minimum target value)	Setting range: 0—100% For setting corresponding relationship between analog quantity and target frequency (PID target value) For example, when AVI terminal input 10V*2%=0.2V, frequency value reaches the minimum frequency (P022).	2
P110	reserved		
P111	reserved		
P112	Run Mode	Setting range: 0, Normal operation; 1, PID mode, control panel▲、▼set the target value, AVI terminal input the amount of feedback; 2, PID mode, control panel▲、▼set the target value, ACI terminal input the amount of	0 0